4 POSITION FUNCTION SELECTOR SWITCH

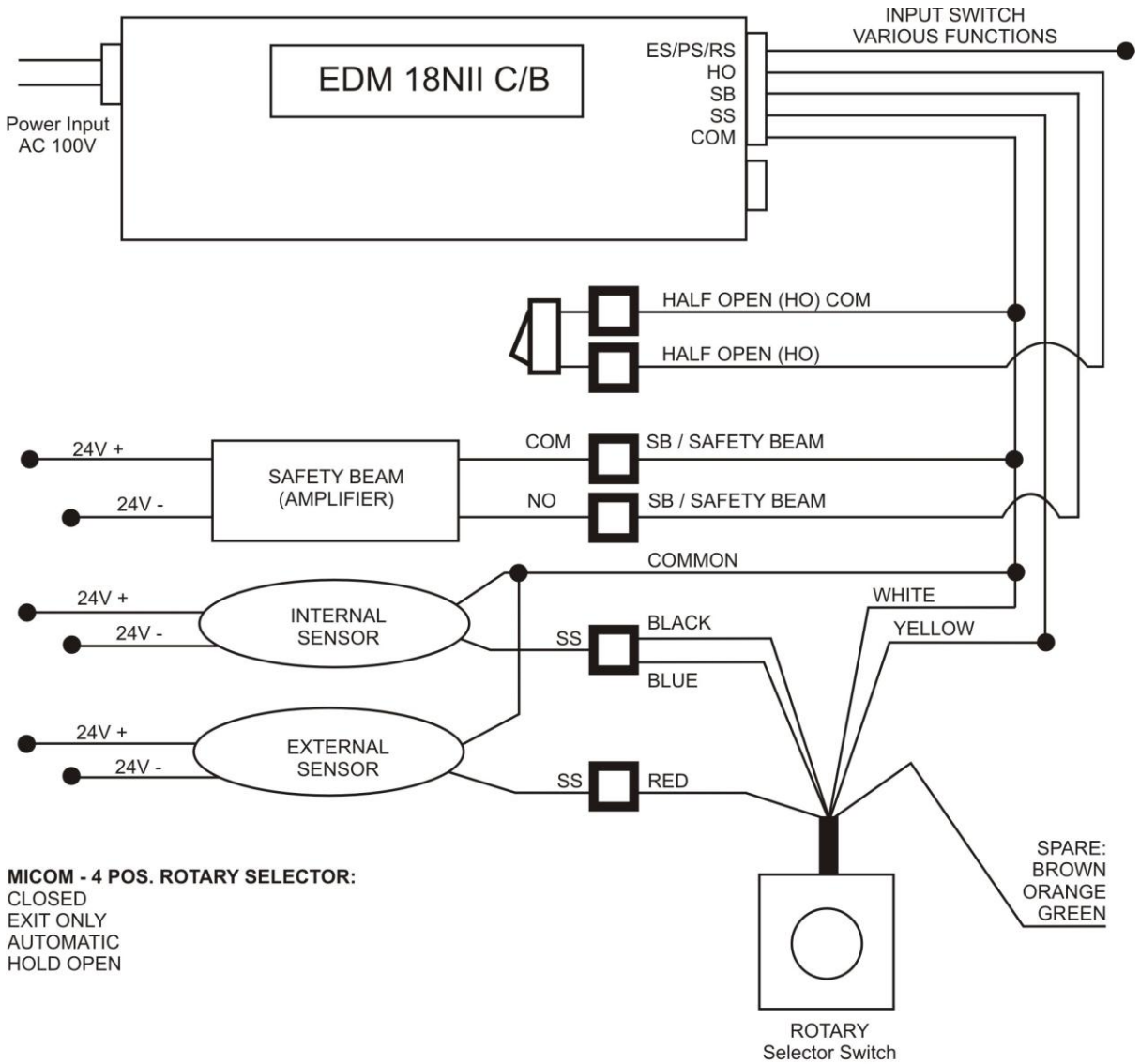

4 POSITION FUNCTION SELECTOR SWITCH – WITH PUSH BUTTON

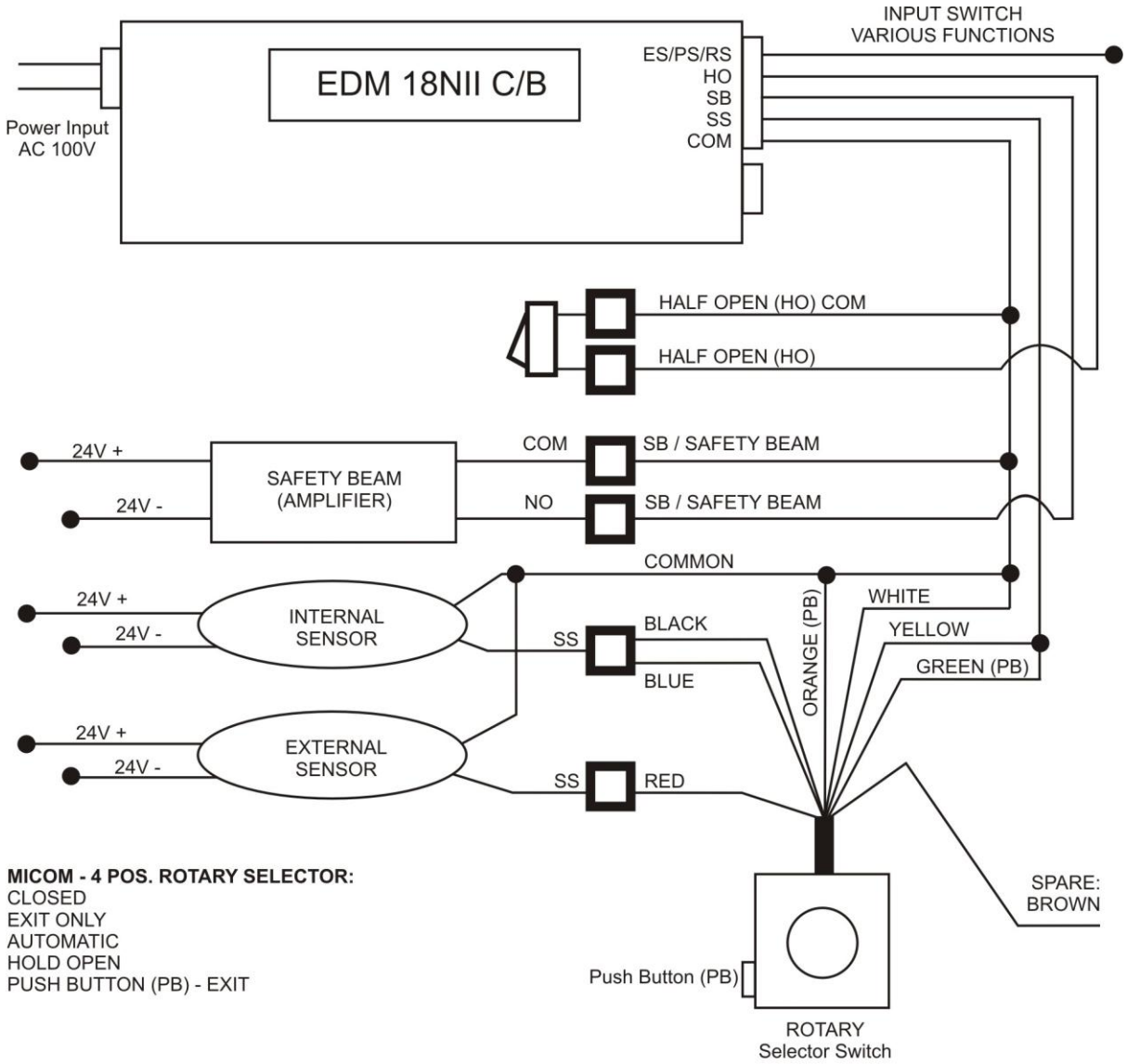

MICOM - 4 POS. ROTARY SELECTOR:
CLOSED
EXIT ONLY
AUTOMATIC
HOLD OPEN
PUSH BUTTON (PB) - EXIT

4 POSITION FUNCTION SELECTOR SWITCH – WITH PUSH BUTTON EMERGENCY BATTERY OPEN

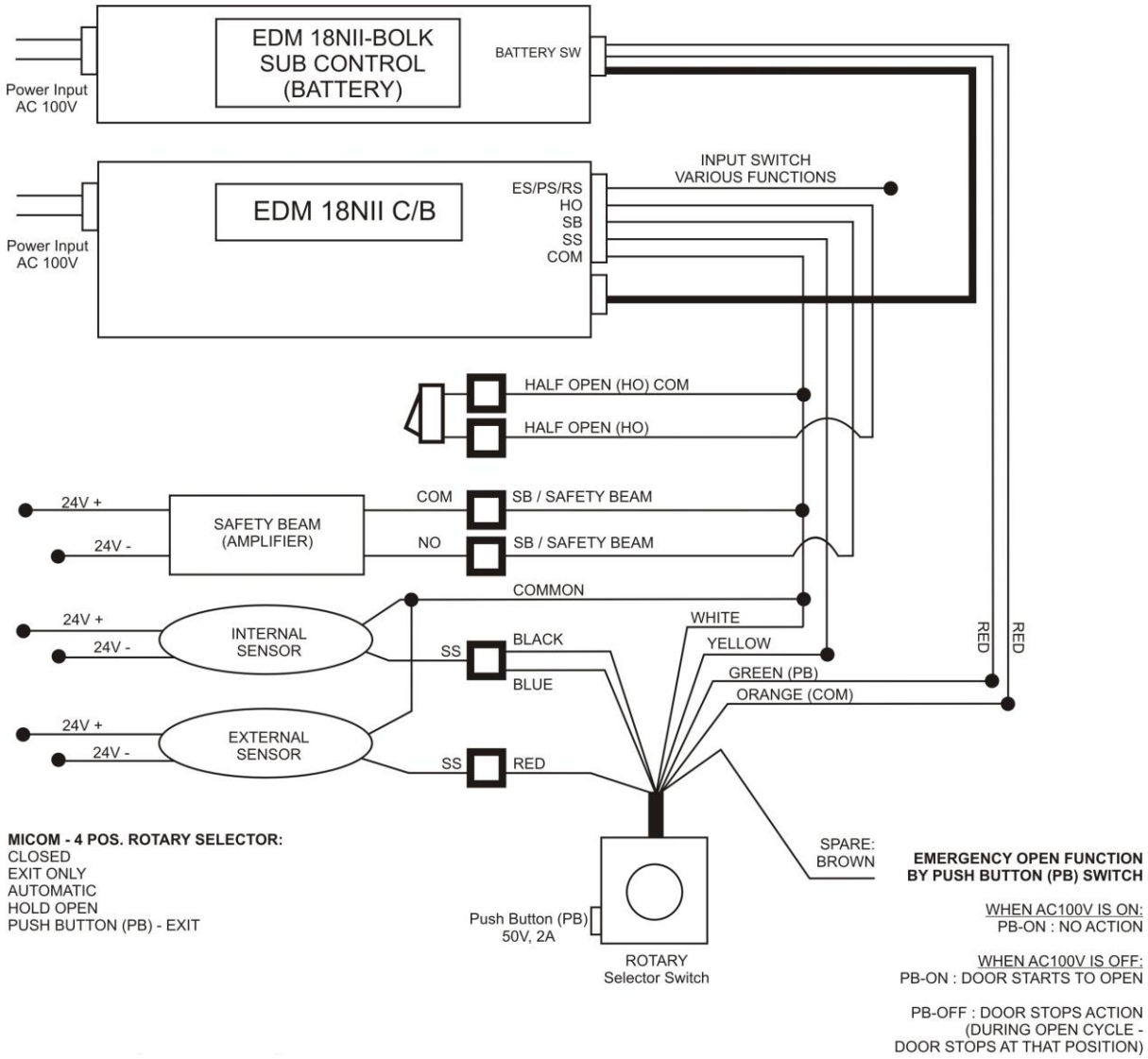
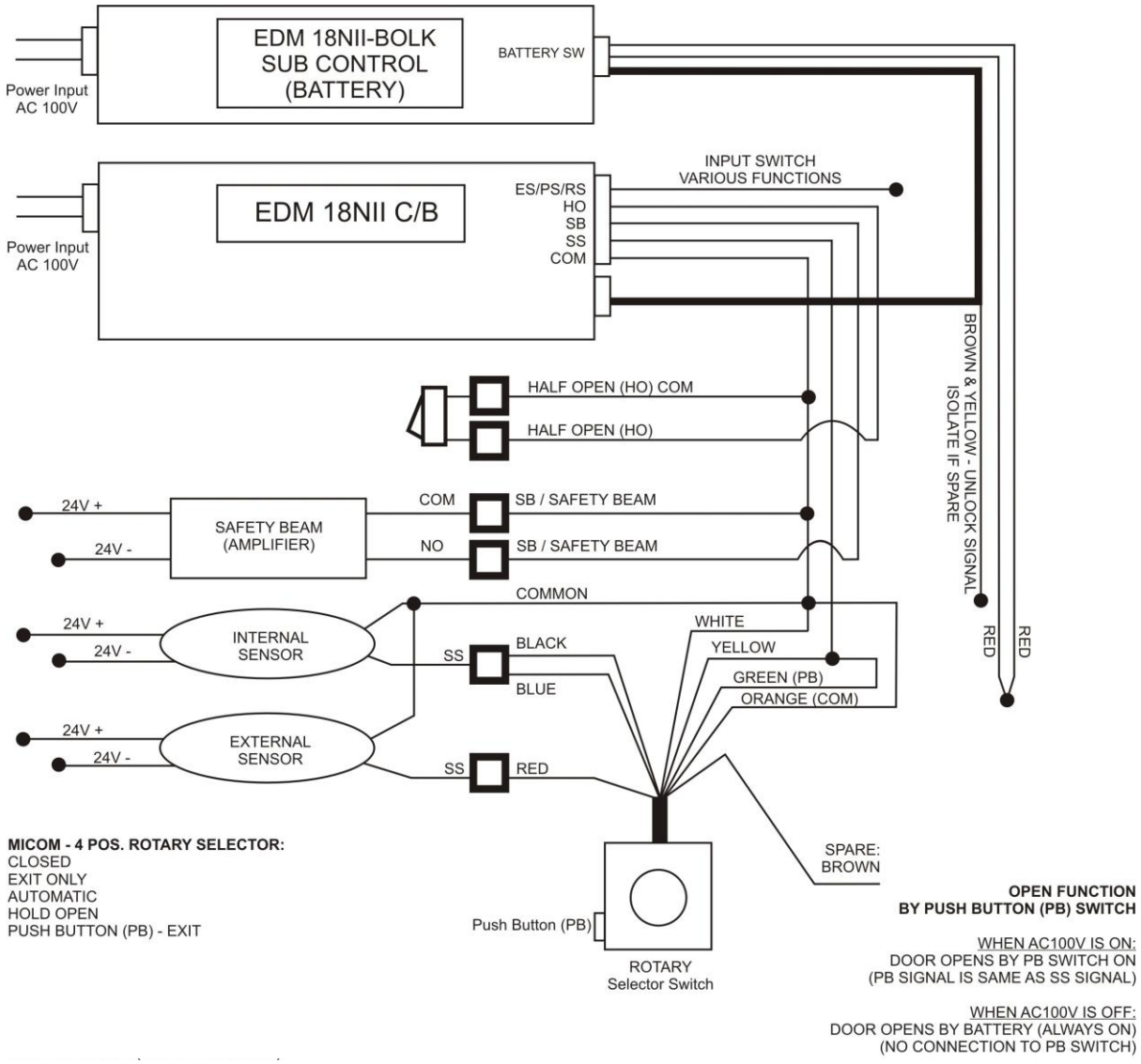
3. 4 POSITION FUNCTION SELECTOR SWITCH – WITH PUSH BUTTON BATTERY OPEN (ONE SHOT)